FERIC FOREST ENGINEERING RESEARCH INSTITUTE OF CANADA
INSTITUT CANADIEN DE RECHERCHES EN GÉNIE FORESTIER

TN #
36

An Evaluation of Grapple-Crane Yarding in Coastal B.C.

E.A. SAUDER

Technical Note No. TN-36

November 1980

201 - 2112 West Broadway, Vancouver, B.C., Canada V6K 2C8
143 Place Frontenac, Pointe Claire, Québec, Canada H9R 4Z7

FOREWORD

FERIC is grateful to the management and crew of MacMillan Bloedel Shawnigan Division for their generous assistance and cooperation during this study. Particular thanks go to J. Seaton, M. Pickard, J. Marc and J. Shillito for their valuable help reviewing the draft report.

CONTENTS

FIGURES

TABLES

SUMMARY

FERIC performed this study at the Shawnigan Division of MacMillan Bloedel to determine if the theoretical advantages of grapple yarding were being realized. We wanted to see how a grapple modified locally would perform, how turn time, volume, and yarding distance were related, and what production the machines achieved.

There were five main advantages to the grapple-yarding/crane system:

- small crew size
- safety (no men hooking or unhooking turns)
- simple and rapid yarding road changes with mobile yarder and mobile backspar
- no landings required as logs were windrowed beside the logging road
- independent yarding and loading operations

The grapple made use of a closing line to close the jaws and to pinch small-diameter logs to prevent them from slipping out. A modification of the grapple was observed in use. Its main feature was an arrangement to permit the jaws to hang vertically regardless of the slope of the running lines. The slopes yarded during this study were not steep enough to demonstrate this advantage; however, line wear on the closing line was reduced with the new grapple.

Graphs of the study data indicate that yarding cycle times are closely related to yarding distance but only slightly influenced by turn volume. The faster Madill 044 outproduced the slower American 7250 at distances over 300 ft (91.4 m).

The grapple yarding cranes were found to produce over 250 pieces per shift on a consistent basis.

Grapple yarding ground disturbance was moderate and evenly distributed over the settings.

An ergonomic check of the Madill 044 was performed. The yarder was found ergonomically satisfactory, although some suggestions were noted, such as improved access to the cab and relocation of the fire extinguisher.

INTRODUCTION

Modern grapple yarding originated in 1966, when the Skagit Corporation built their GT-5 "Guylineless Tower Yarder" in an attempt to increase productivity per man. In British Columbia several companies experimented with grapple yarders in the late 1960s. In the 1970s grapple yarding came into widespread use in coastal British Columbia and is now recognized as an effective way of reducing logging costs.

MacMillan Bloedel's Shawnigan Division was proposed as a successful example of grapple yarding for study. During the months preceding the study, production had increased using two Madill 044 grapple yarders and an American 7250 demonstrating that three yarders could produce the yearly quota without double-shifting. Table 1 shows the annual production.

TABLE 1. Annual Log Production by Logging Types
MB Shawnigan Division

	Volume	
	(Cunits)	(m^3)
Grapple crane yarding	64,000	181 230
Salvage logging	1,000	2 830
Right-of-way/Direct loading	25,000	70 790
Total	90,000	254 850

Advantages of Grapple Crane Yarding

Grapple crane yarding has a number of advantages compared to other yarding systems:

1) Fewer men are required. The grapple crew FERIC observed consisted of three men:

   - one yarder operator;

   - one spotter to assist the operator in locating logs and in yarding road changes;

   - one backspar operator to move the backspar and act as a spotter at outer parts of the setting if a mobile backspar is used.

   (If stumps and standing trees are used as tail-holds, additional men may be required.)

2) It is safer. Chasers and chokermen are not required. A running skyline system is used that does not have a haulback bight to endanger crew.

3) Cycle time is faster. Cycle time is dependent on the machine speed and the operator. The operator can set his own rhythm. Little time is spent hooking or unhooking logs. Chokermen and chasers do not delay yarding, as they do in highlead when they must scramble over logs to prepare or unhook a turn and get back to a safe observation area.

4) The crane can always position itself to use the shortest or most advantageous yarding road. Grapple cranes and mobile backspars work on yarding roads almost parallel to each other in the usual windrow-yarding pattern common to parallel roads. Machines yarding to a central landing must reach long corners.

5) Yarding road changes are faster. Mobile backspar and simple guyline configurations on yarders reduce road change time.

6) Landings are not required. Landing construction costs are reduced or eliminated as swing-type yarders windrow logs beside the road.

7) Loading is efficient. The large stockpile of windrowed logs will reduce loading time and increase the loader's efficiency. The loader and yarder are not dependent on each other's production.

STUDY OBJECTIVES

The study had three objectives:

1) To determine how well the theoretical advantages of grapple yarding can be realized.

2) To determine whether a locally-designed grapple was an improvement over the older type grapple.

3) To determine the relationship between turn time, turn volume and yarding distance, and thus to establish the productivity of grapple crane yarders under typical conditions.

AREA

The Shawnigan Division grapple crane study included two visits, one in the spring and one in the fall of 1979. Details of the two areas studied are described in Table 2. Typical yarding road profiles are shown in Figure A.

TABLE 2. Description of Study Areas, 1979

	Spring	Fall
Maximum yarding distance - ft	640	560
- m	195	170
Slope (yarding)	30% uphill	9% uphill
Timber types*	F H C	H B C (F)
Average log size from company estimates - cunits	.33	.33
- m^3	.93	.93
Terrain	uniform brushy	uniform brushy
Deflection	good	good
Operator visibility	good to fair	good to fair

*F - Douglas-fir H - Western hemlock
C - Western red cedar B - Balsam (amabilis fir)

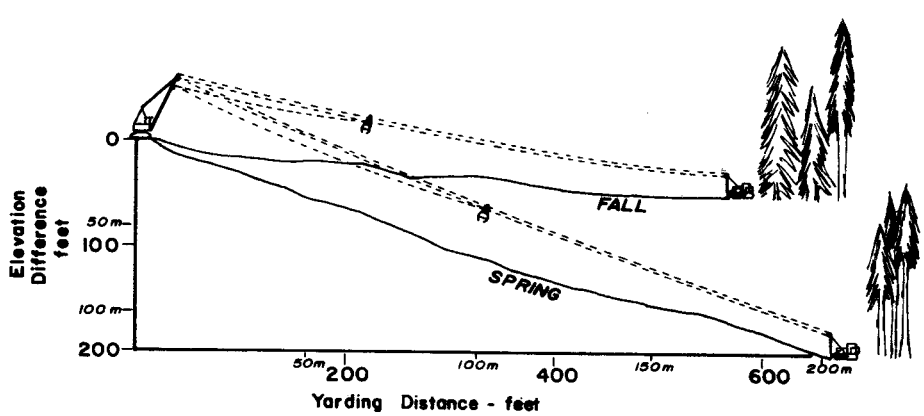

FIGURE A. Yarding road profiles

GRAPPLE YARDING

DESCRIPTION OF GRAPPLE CRANE YARDERS (MADILL 044 AND AMERICAN 7250)

Table 3 shows the manufacturer's machine specifications and Tables 4 and 4a show the line capacity, line pulls and line speeds specified by the manufacturers. Results of an ergonomic check on the Madill 044 yarder, based on a FERIC preliminary ergonomic checklist (Zerbe, 1979), are shown in Appendix III.

TABLE 3. Machine Specifications

	Madill 044	American 7250
Engine	GM V12 - N71 Mark 20	GM 6 - N71
Undercarriage	Tracks/Rubber	Tracks
Swing capability	Yes	Yes
Swing speed	0-12 r.p.m.	
Tower type	A-Frame, Fabricated steel	A-Frame, Fabricated steel
Height to top of fairlead	60 ft (18.3 m)	54 ft (16.5 m)
No. of guylines	one-two	one
Weight (tracked)	197,600 lb (89 357 kg)	165,000 lb (74 842 kg)
Ground pressure (tracked)	22 psi (152 kpa)	14 psi (97 kpa)

TABLE 4. Operating Specifications (Imperial)

Drum	MADILL 044						AMERICAN 7250		
	Line Capacity (in) (ft)	Line Pull (lb)		Maximum Line Speed (fpm)		Operating Capacity (in) (ft)	Line Pull (lb)	Maximum Line Speed (fpm)
		Low Gear	High Gear	Low Gear	High Gear			
Main	* 1 - 1760	Bare 124,000	Bare 63,000	Bare 550	Bare 1100	* 7/8 - 850	Bare 95,000	
	1 1/8 - 1390	Mid 74,000	Mid 38,000	Mid 900	Mid 1750	Note: Yarder has a split main drum. One side holds the mainline, the other side the tag line.		
	1 1/4 - 1130	Full 53,000	Full 27,000	Full 1250	Full 2450			800
Haulback	5/8 - 4500	Bare 112,000	Bare 57,000	Bare 550	Bare 1100		Bare 25,500	
	3/4 - 3120	Mid 68,000	Mid 35,000	Mid 900	Mid 1750			
	* 7/8 - 2300	Full 49,000	Full 25,000	Full 1250	Full 2450	* 7/8 - 2000		3350
Tagline	3/8 - 4300	Bare 15,150	Bare 15,150	Bare 846	Bare 1660	* 7/8 - 850	Bare 95,000	
	1/2 - 2400	Mid 12,100	Mid 12,100	Mid 1058	Mid 2078			
	5/8 - 1500							
	* 3/4 - 1100	Full 10,100	Full 10,100	Full 1270	Full 2495			800
Strawline	1/4 - 7200	Bare 54,400	Bare 54,400	Bare 473	Bare 928		Bare 16,000	
	3/8 - 3200	Mid 36,050	Mid 36,050	Mid 713	Mid 1400	3/8 - 2500		
	* 7/16 - 2360	Full 22,450	Full 22,450	Full 954	Full 1873	* 7/16 - 1800		3350
Guyline	* 1 1/4 - 290	Bare 71,600	Bare 55,250	Bare 505	Bare 992	1 - 300	Bare 4,500	
	1 3/8 - 240	Mid 50,700	Mid 39,100	Mid 713	Mid 1400	* 1 1/8 - 250		
		Full 39,050	Full 30,250	Full 922	Full 1810			50

* Used at Shawnigan Division

TABLE 4a. Operating Specifications (SI units)

Drum	MADILL 044					AMERICAN 7250		
	Operating Capacity (mm) (m)	Line Pull (kg)		Maximum Line Speed (mps)		Operating Capacity (mm) (m)	Line Pull (kg)	Maximum Line Speed (mps)
		Low Gear	High Gear	Low Gear	High Gear			
Main	* 26 - 536	Bare 56 250	Bare 28 580	Bare 2.8	Bare 5.6	* 22 - 260	Bare 43 090	
	29 - 424	Mid 33 570	Mid 17 240	Mid 4.6	Mid 8.9	Note: Yarder has a split main drum. One side holds the mainline, the other side the tag line.		
	32 - 344	Full 24 040	Full 12 250	Full 6.3	Full 12.4			4.1
Haulback	16 - 1372	Bare 50 800	Bare 25 850	Bare 2.8	Bare 5.6		Bare 11 570	
	19 - 951	Mid 30 840	Mid 15 880	Mid 4.6	Mid 8.9			
	* 22 - 701	Full 22 230	Full 11 340	Full 6.3	Full 12.4	* 22 - 610		17.0
Tagline	9.5 - 1311	Bare 6 870	Bare 6 870	Bare 4.3	Bare 8.4	* 22 - 260	Bare 43 090	
	13 - 732	Mid 5 490	Mid 5 490	Mid 5.4	Mid 10.6			
	16 - 457							
	* 19 - 335	Full 4 580	Full 4 580	Full 6.4	Full 12.7			4.1
Strawline	6.5 - 2195	Bare 24 680	Bare 24 680	Bare 2.4	Bare 4.7		Bare 7 260	
	9.5 - 976	Mid 16 350	Mid 16 350	Mid 3.6	Mid 7.1	9.5 - 762		
	* 11 - 719	Full 10 180	Full 10 180	Full 4.8	Full 9.5	* 11 - 550		17.0
Guyline	* 32 - 88	Bare 32 480	Bare 25 060	Bare 2.6	Bare 5.0	26 - 91	Bare 2 040	
	35 - 73	Mid 23 000	Mid 17 740	Mid 3.6	Mid 7.1	* 29 - 80		
		Full 17 710	Full 13 720	Full 4.7	Full 9.2			.3

* Used at Shawnigan Division

FIGURE B. Madill 044
Yarding Crane

FIGURE C. American 7250 Grapple
Yarder

The Madill 044 (Figure B) has an independent main and tag drum for grapple yarding. The tagline drum has less power and braking capacity than the mainline drum. Carriage out-hauls must therefore be tightlined with the mainline drum and this keeps the grapple closed. When it reaches the log there is a slight delay while the grapple is opened. Only the mainline pulls in the turn.

The Madill 044 can use two guylines; however, Shawnigan Division used only one.

The American 7250 (Figure C) has a split main drum. Either side can be used as a main or tagline drum. The grapple is sent out open. The two lines can then pull in the turn together with greater maximum combined line pull compared to the Madill 044. The yarder has much slower line speeds and is equipped for shorter yarding distances.

The American 7250 has one guyline.

Carriages and Grapples

The carriage was supported by a 12-in. (30.48-cm) block running along the skyline (haulback). The carriage contained two 12-in. (30.48-cm) sheaves, side by side. The grapple jaws were pinned at the top, and hung from the carriage by large chain links. Appendix I describes the grapples.

Figure D shows the regular grapple as it was attached to the carriage. Its jaws were made of 3-in. (7.6-cm) mild steel plate and had a 76-in. (193-cm) opening.

The modified grapple* was pinned to the carriage (Figure E) allowing the jaws to hang vertically regardless of the slope of the carriage and running lines. It was expected the modification would substantially increase grapple yarding production.

Both grapple designs were the "choker" type (see Appendix I). The closing line pinches logs against the grapple jaws so that even small logs were held firmly.

---

*Ron Williams received a $1,000 FERIC award for this grapple design modification.

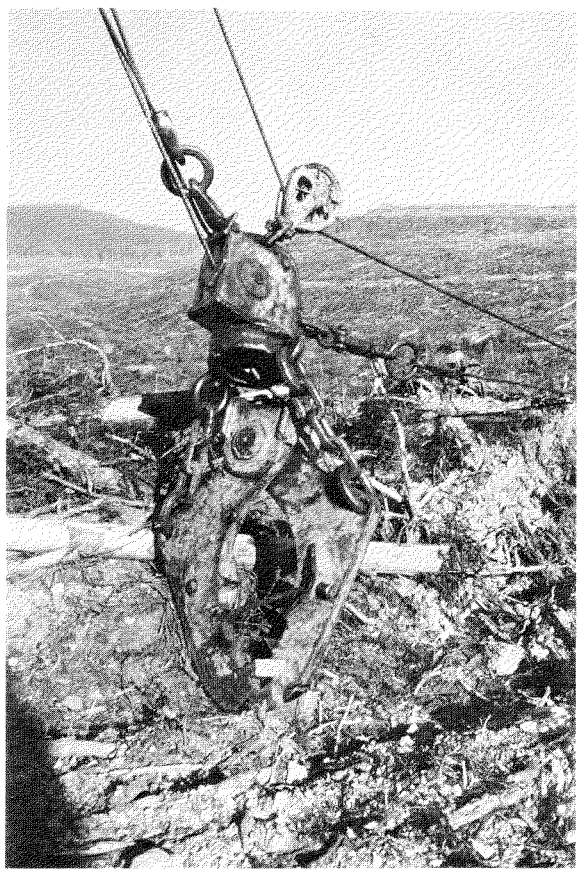

FIGURE D. Regular grapple

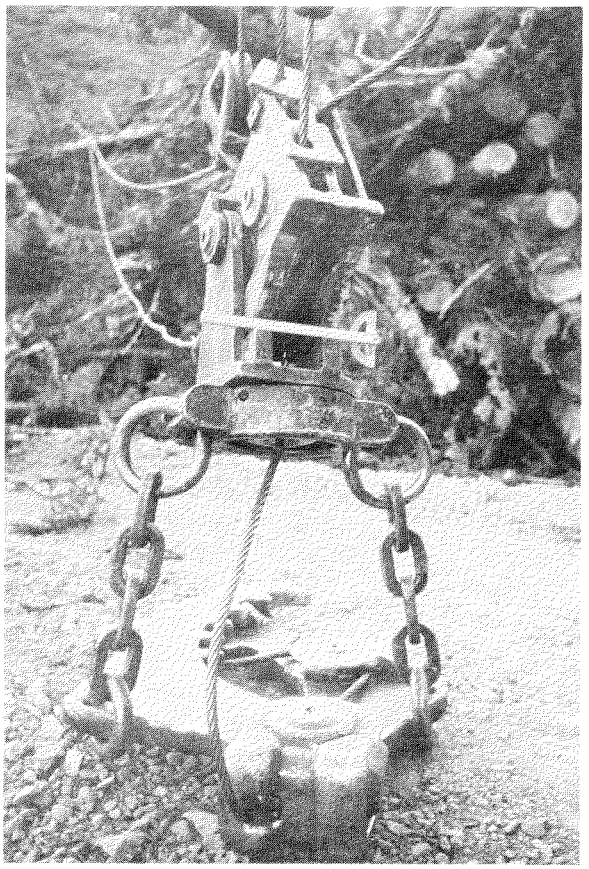

FIGURE E. Modified grapple

Crew

Each yarding crew was made up of a yarder operator, a spotter and a mobile-backspar operator. The yarder operator and spotter occasionally exchanged jobs. This allowed flexibility to train potential operators and to reduce operator fatigue. Spotters were also rotated between machines so they were exposed to the best operator techniques. The entire crew was highly skilled and competent. Each crew member had a portable radio for instant communication with the other crewmen.

Mobile Backspar

Shawnigan Division used rebuilt Caterpillar D8's as mobile backspars. A 16-ft (4.9-m) spar with a fairlead rigged on the top was mounted on the blade (overall height to top of fairlead 22 ft (6.7-m)). The spar was braced to both sides of the C-frame and guyed to the ends of the blade.

The tractors were in good condition to minimize delays. (Undercarriage and track assemblies were in good repair. The engine was reliable for starting, the hydraulic system adequate to lift the blade and spar, and the winch sufficient to pull the tractor out of difficult situations.)

Operating Method

Grapple yarding was set up as shown in Figure F.

The system required a yarder with a mainline, a tagline to open the grapple, and a haulback line. Details of the rigging configuration can be seen in Appendix I.

Once the yarder and backspar had been set up, the operator prepared his log deck, using logs within 100 ft (30 m) of his machine.

Beyond 100 ft (30 m) the yarder operator sent the grapple out, swung the boom to position the grapple, grabbed a log and brought it to the log deck beside the machine. Logs were decked to the side to keep the operator's field of vision clear. The cycle was repeated until all the logs were yarded. (The spotter periodically checked the yard-

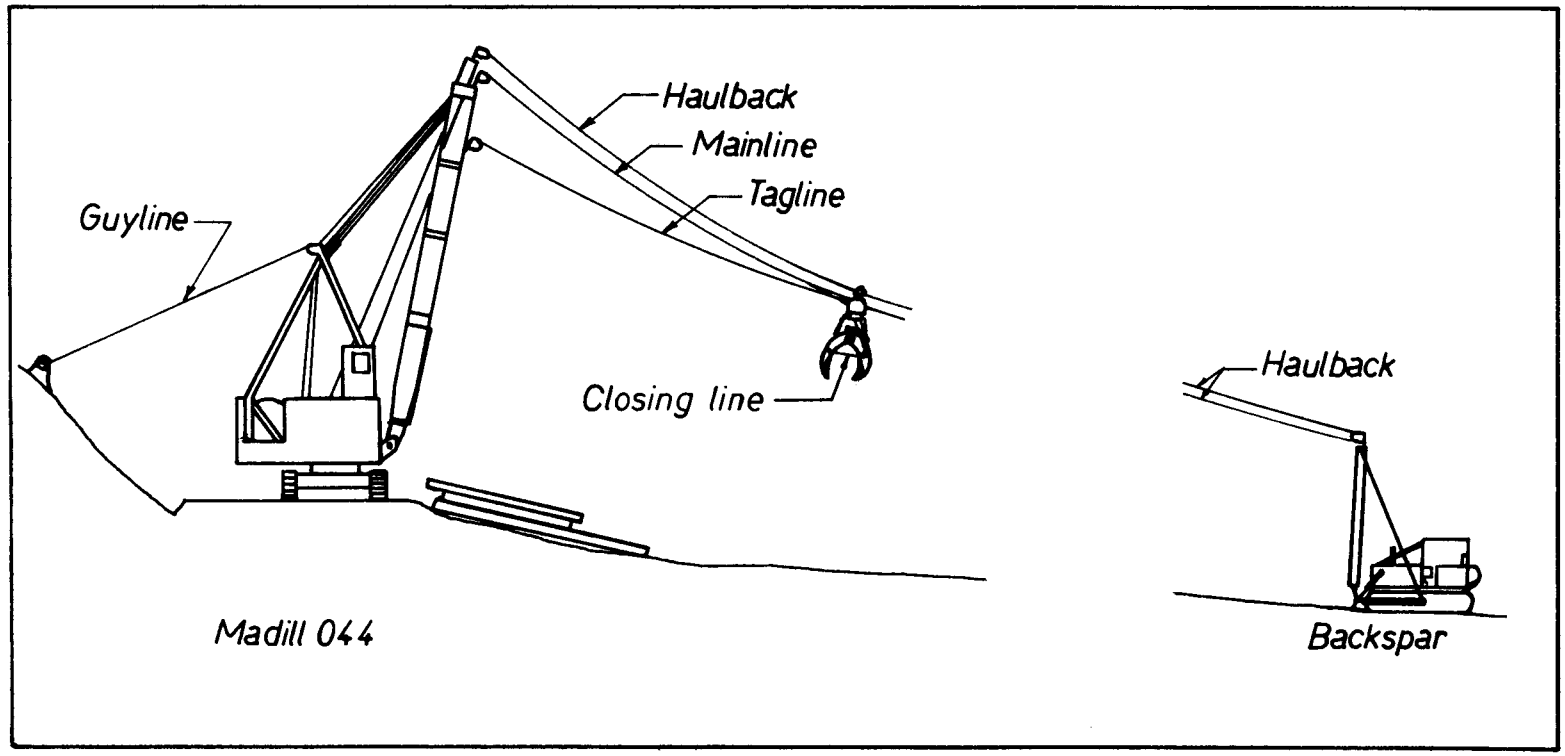

FIGURE F. Grapple-yarding setup

ing road to make sure all the logs were yarded.) As logging on the road neared completion the backspar operator prepared to move his tractor.

Side reach was greatest near the yarder, diminishing toward the backspar. For this reason, two or three backspar moves were made before the grapple yarder changed position. The grapple was held at the top of the boom during backspar or yarder moves and the haulback was kept off the ground to avoid tangles around stumps or logs.

Track-mounted units could simply walk ahead when required to move. Rubber-tire mounted units had to retract and extend outriggers. When it was necessary, guylines were moved to pre-notched stumps which the spotter prepared beforehand.

METHOD OF STUDY

Two Madill 044 yarders (Y36 with the modified grapple, Y40 with the regular grapple) and an American 7250 (Y29) were each studied for two days in the spring of 1979. The American 7250 was retired during the summer. In the fall FERIC made further studies of the two original Madill yarders.

Each crew was observed for a two-day period during each visit. Detailed timing of various parts of complete cycles was carried out to determine line speeds and times for hooking, unhooking, and equipment moves. Log volumes were estimated for timed turns.

STUDY RESULTS

1. During our studies comparing two Madill 044 yarding cranes and an American 7250, it was apparent that individual operator preferences were more important than mechanical differences between the grapples. The modified grapple may be of significant benefit on steep logging areas but this did not show in our study because of the relatively gentle slopes encountered.

   Wear on the modified grapple's closing line had been reduced by increasing the size of the opening between the grapple and carriage, thus decreasing the bending of the line. The utilization of discarded mainlines as grapple-closing lines and the reduced time required to replace broken lines offered significant savings to Shawnigan Division. According to the crew, the closing line lasted 1½ to 2 shifts on the modified grapple, compared to 1 shift on the standard grapple. Each closing line repair required from 10 minutes to 30 minutes to complete.

2. Table 5 is a summary of the detailed timing. Outhaul and inhaul travel times are dependent on yarding distances. Compared with the Y36 with the shortest yarding (333 ft or 101 m) and the shortest outhaul time (.26 min), the Y40 used in June yarded further (427 ft or 130 m) and had the longest travel time (.51 min). Hookup times were similar for the Madills working in June (average: .51 min) and both increased to .68 min in October, possibly due to increased brush or poor ground deflection obscuring the operator's field of vision. Unhook times for all periods were similar except for those in June applying to the Y36 with the modified grapple (.19 min). This unhook time was only two thirds the time FERIC recorded for the same machine with a new operator the following fall (.29 min). If there was any significant advantage in using the modified grapple, it was expected to affect hookup time.

   The American 7250 was slower in all phases, possibly as a result of the slower line speeds and infrequent use of a spotter.

TABLE 5. Summary of Detailed Timing

	MADILL 044				American 7250
	6-7 June Y40	10-11 Oct. Y40	12-13 Oct. Y36	29-30 Oct. Y36	8-11 June Y29
Grapple type	Std.	Std.	Mod.	Mod.	Std.
Average log volume - Cu	.36	.42	.35	.54	.62
- m^3	1.02	1.19	.99	1.53	1.76
Average turn volume - Cu	.40	.52	.41	.62	.70
- m^3	1.13	1.47	1.16	1.76	1.98
Average turn weight - lb	1686	2001	1699	2488	2836
- kg	765	908	771	1129	1286
Average yarding distance - ft	427	370	333	371	387
- m	130	113	101	113	118
Average yarding phase time (min):					
Outhaul	.20	.13	.12	.16	.22
Hooking	.52	.68	.50	.68	.77
Inhaul	.31	.23	.14	.22	.41
Unhook	.31	.30	.19	.28	.35
Total yarding phase	1.34	1.34	.95	1.34	1.75
Average speeds:					
Outhaul - fpm	1254	1315	1267	1138	920
- mps	6.37	6.68	6.44	5.78	4.67
Inhaul - fpm	821	898	1070	879	475
- mps	4.17	4.56	5.44	4.47	2.41
Average time for each (min):					
Tail cat move	1.69	1.67	1.09	1.00	1.66
Yarder move	6.70	1.92	5.14	4.22	1.98
Yarding road check	2.43	1.29	1.40	1.33	1.57
Yarding within 100 ft (30 m)	6.33	4.70	2.58	6.92	3.00
A Sample of Yarding Time and Distance of Yarding Roads:					
Yarding time (min per road)	26.37	49.42	35.53	42.68	30.08
Average logging time of yarder setups (min):	114.28	84.72	79.95	119.51	120.31
Yarding distance - ft	400	290	310	290	250
- m	120	90	95	90	80
Number of turns	185	280	434	332	323

The total yarding phase time for the Madills was 1.34 min, except for the Y36 operating in June (.95 min). This difference was primarily due to faster unhooking and shorter yarding distance.

The average outhaul line-speed of the Madill yarders was 1244 fpm (6.3 mps) and the inhaul speed was 917 fpm (4.7 mps). In comparison, the outhaul grapple speed for the American was 25% less, (920 fpm (4.7 mps)), and its inhaul was nearly 50% less.

Additional times, such as road and landing changes and mechanical and non-mechanical delays, were prorated and added to turn times. The resulting turn times varied with the yarding distance. The Y29 averaged 1.86 min per turn (average yarding distance 250 ft (76 m)); the Y36 averaged 1.61 min per turn (average yarding distance 300 ft (91 m)); and the Y40 averaged 2.01 min per turn (average yarding distance 330 ft (100 m)).

Time spent yarding a single road varied from 26 min to 50 min with an average of 39 min per road for the Madill 044 and 37 min for the American. The time spent between landing changes (yarder moves) varied between 80 min and 120 min with an average of 100 min for the Madill and 120 min for the American.

The variation in time between road and landing changes was caused by the number of logs per yarding road, the variation in the use of spotters and the delay occurrences.

Appendix II graphs show the fixed times for outhaul, hookup and unhook combined with the inhaul times for various log sizes. Although based on a limited sampling, the results were nevertheless significant:

a) The fixed times (Line A) varied with machine performance, operator skill and terrain.

b) Turn volume did not appear to have a significant effect on the inhaul time. The American 7250's inhaul speeds were least affected by turn volume. Power outputs for all yarders appeared more than adequate for the yarding conditions encountered during the study.

c) Some of the larger logs may have had shorter turn times than those for the smaller logs because they were easier to see and grapple.

3. Grapple yarding was an effective method for yarding a high number of pieces per shift with a small crew. During the observation periods, production (Table 6) was lower than normal owing to the short duration of the study coinciding with breakdowns and yarder moves to other areas. In addition, the spring figures may have been influenced by labor problems during contract negotiations and by crew adjustment to early shifts begun during a period of dry weather.

   Shawnigan Division records indicate that each yarder has regularly produced over 300 pieces per shift.

   During previous working periods, the American 7250 produced more than the Madill 044 on yarding distances shorter than 300 ft (91.4 m). The American had sufficient power to yard heavy logs near the maximum line speeds.

4. Figure G shows a summary of the percentage time distribution observed during the study for all the yarders (based on a weighted average of turns.) Decking and cherry-picking combined were found to average 5% of the total turn time. The Y40 was found to spend 4% of its time decking and 1% cherry-picking, while the Y36 spent 3% cherry-picking and 1% decking. The Y29 divided decking and cherry-picking equally. Production time averaged 74% of the total, with yarding occupying 60 percent.

   Delays were found to average 26% of the observed time. Repairs (6%) and operational delays (2%) were similar for all yarders in the study. An average 5% of the total time was spent checking the yarding roads for logs (the Y40--5%, Y36--3%, and the Y29--6%). Personnel delays varied from 10% for the Y29 to 13% of the total yarding time for the Y40. Service was found to average 3% of the total.

   Due to the short periods of observation, machine utilization figures were not calculated. The average mechanical availability was 90% for all yarders. Table 7 summarizes the times observed.

TABLE 6. Production During Study

			SPRING			FALL		
MODEL NO.	MACHINE NO.	GRAPPLE TYPE	AVERAGE NO. OF PIECES PER SHIFT	VOLUME PER SHIFT (MB ESTIMATE)	NO. OF SHIFTS	AVERAGE NO. OF PIECES PER SHIFT	VOLUME PER SHIFT (MB ESTIMATE	NO. OF SHIFTS
American 7250	Y29	Standard	248	82 cunits 232 m^3	5			
Madill 044	Y36	Modified	343	95 cunits 269 m^3	5	185	74 cunits 210 m^3	4
Madill 044	Y40	Standard	301	92 cunits 260 m^3	5	253	101 cunits 286 m^3	4

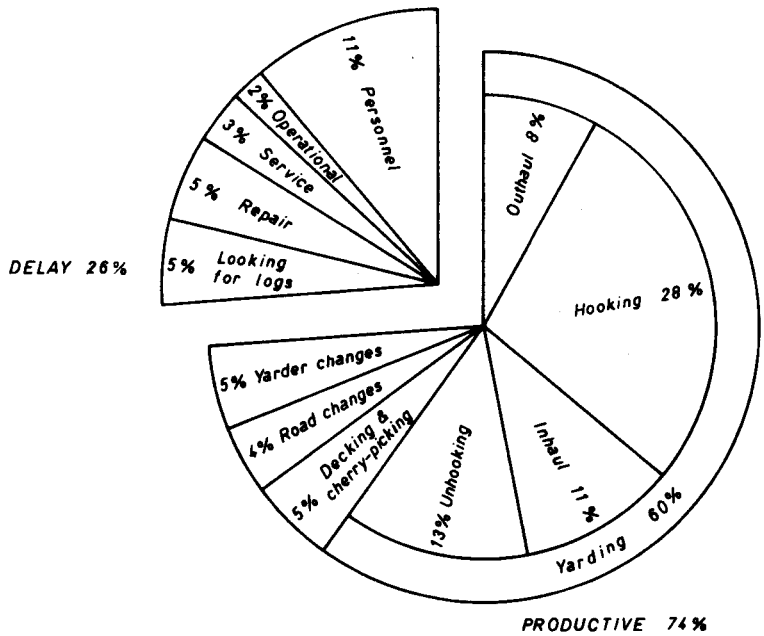

FIGURE G. Percentage Time Distribution Summary

TABLE 7. Summary of Observed Time

Total Time (min)	Madill 044	American 7250	Total
Productive	1639.72	441.90	2081.16
Delays			
Mechanical	182.40	50.06	232.46
Non-Mechanical	350.90	109.57	460.47
Total delays	533.30	159.63	692.93
Total Observed Time	2173.02	601.53	2774.55

Note: Timing was not continuous throughout the observed periods.

5. Using Figure G and the graphs in Appendix II, an average time per turn can be calculated. From Appendix II, the time required for the Y40 to yard a turn from 330 ft (100 m) averaged 1.16 min in both June and October. If this is 60% of the turn time, the complete turn would average 1.93 min, and this is very close to the average 2.01 min turn time observed.

   A second example using the Y36 in June, at a yarding distance of 500 ft (150 m), shows the average time was 1.20 min (Appendix II). If this is 60% of the total, the complete turn would take 2 min, including all road and landing changes and delays.

6. Other observations:

   - Actual line speeds (Table 5) were lower than manufacturer's specifications. Many different power trains have been produced for American 7250 units, making line speed and line pull specifications difficult to evaluate.

   - Spotters are required 300 ft to 400 ft (90 m to 120 m) away from the yarder. For distances less than 300 ft (90 m) the spotter and backspar operator's jobs were combined. Distances greater than 400 ft (120 m) required a spotter to assist the operator in hooking logs that were hidden from view.

   - Concave sidehills facing the operator allowed for improved visibility but decreased depth perception at longer distances and prevented effective grappling without assistance. Radios were used by the crew to help minimize delay time spent checking for logs and moving the backspar.

   - Log breakage was minimal. During our study there were seldom any broken logs caused by yarding although occasionally a log caught on a stump and snapped.

   - Although deflection was good it did not appear too important at distances up to 600 ft (180 m). The grapple must be clear of obstacles during the outhaul to avoid damage. On the inhaul, however, heavy logs were dragged in (regardless of deflection) using the

swing capability of the yarder to avoid obstacles.

- Logs grappled in their centres were yarded more slowly than end-grappled logs because they did not stay in the direction of lead. Long, unbucked logs were difficult to break loose and to deck.

- Soil disturbance was generally low, because yarding roads were distributed over the entire area and not concentrated along specific roads--as they are in highlead. The overall appearance of all grapple-logged areas on the vicinity looked good both for uphill (see Figure H) and downhill logging.

- Mobile backspar roads should be carefully constructed to avoid environmental damage. Backspars should be carefully positioned when set up off the backspar road.

- Logging debris was kept to company standards (B.C. Forest Service Regulations) without evident problems. Each grapple crew finished its area satisfactorily. The spotter continually checked for logs left behind.

FIGURE H. Completed grapple-yarding

- Logs were not fully sorted. Large logs were usually placed on the bottom with smaller logs on top. Limby logs were placed well off to one side to avoid obstucting the operator's vision.

- No time was wasted decking logs although neat piles facilitated later loading (with minimum breakage) and reduced runaway logs on landing areas that sloped.

- The twin mainline system used by the American 7250 seemed slightly better than the Madill 044 main/tagdrum combination. The grapple was open on the outhaul so no time was spent opening the grapple at the logs.

- Small logs were prevented from slipping out of the grapple jaws by having the closing line come through to the grapple, in contact with the log. (See Appendix I.)

- Grapples were serviced daily. The sheaves on the carriage and grapple were greased and rubbing parts sprayed with "gear-dope" three times a day to prevent jamming.

- Yarders were serviced daily by the operator and every 250 hours by the field service crew.

CONCLUSIONS

1. Grapple yarding appeared highly effective for logging the sites visited at yarding distances up to 600 ft (180 m). Most of the theoretical advantages of the system were being realized.

2. Additional studies on steeper terrain would be needed to determine the effect of the modified grapple on production, but reduced closing line wear and replacement times were noted even on gentle slopes.

3. The Madill 044 yarder was found ergonomically satisfactory, although some possibilities for improvement were noted.

REFERENCES

S. Madill. 1979. Owners' Operation Guide for Madill "044" Yarder.

Pacific Logging Congress. Loggers Handbook. Vol. XXVI, 1966. Portland, Oregon.

Pacific Logging Congress. Loggers Handbook. Vol. XXVII, 1967. Portland, Oregon.

Studier, D.D., and V.W. Binkley. 1974. Cable Logging Systems, Pacific Northwest Region. U.S. Department of Agriculture--Forest Service.

Zerbe, W.J. 1979. Preliminary FERIC Guide to Ergonomic Evaluation of Logging Equipment. FERIC Tech. Note No. TN-30.

APPENDIX I

RIGGING CONFIGURATIONS

SKETCH OF STANDARD AND MODIFIED GRAPPLES

MODIFIED GRAPPLE

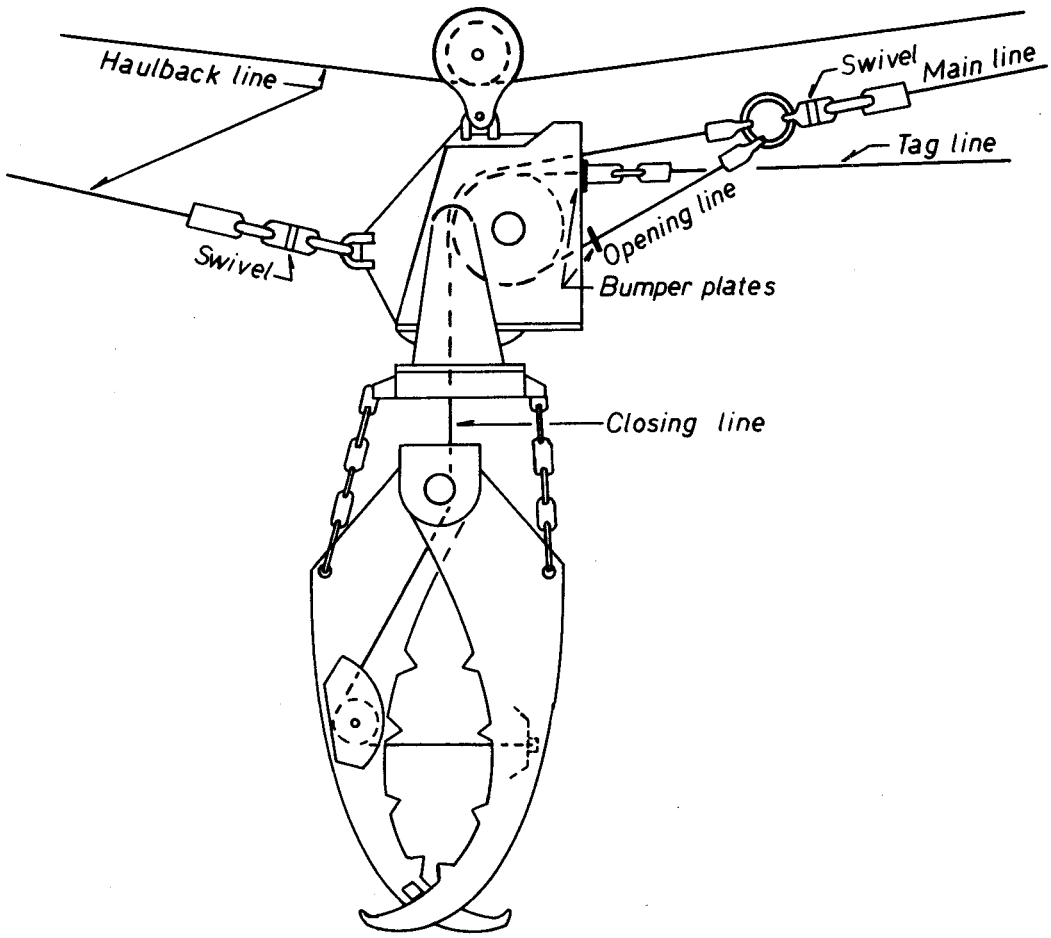

NOTE: Drawing is not to scale

Courtesy Alberni Engineering and Shipyard Ltd., Duncan Iron Works Ltd.

CHOKER GRAPPLE CARRIAGE

Standard Carriage

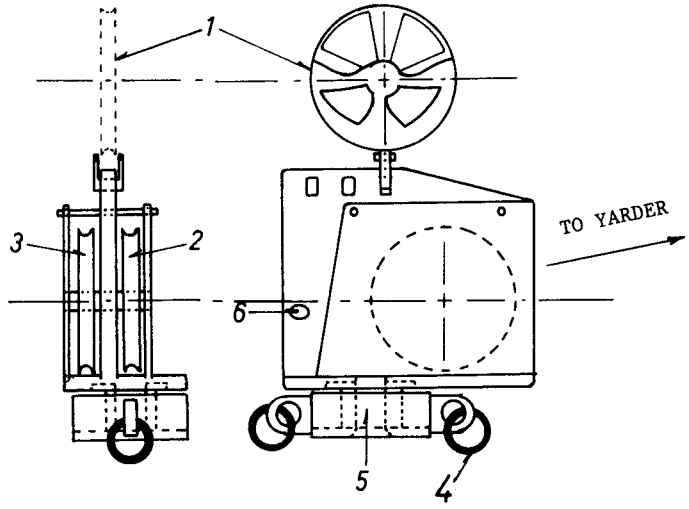

Modified Carriage

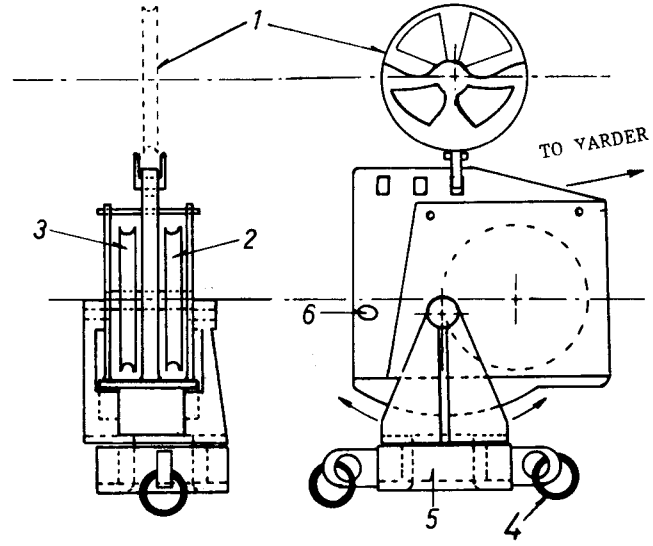

KEY:

1. HAULBACK SHEAVE
2. CLOSING LINE SHEAVE
3. MAIN OR TAG LINE SHEAVE
4. RINGS TO ATTACH GRAPPLE
5. NOTE WIDER OPENING FOR CLOSING LINE ON MODIFIED GRAPPLE
6. HAULBACK SHACKLED TO CARRIAGE

NOTE: THESE ARE SKETCHES ONLY. DRAWINGS ARE NOT TO SCALE.

APPENDIX II

DETAILED TIMING RESULTS

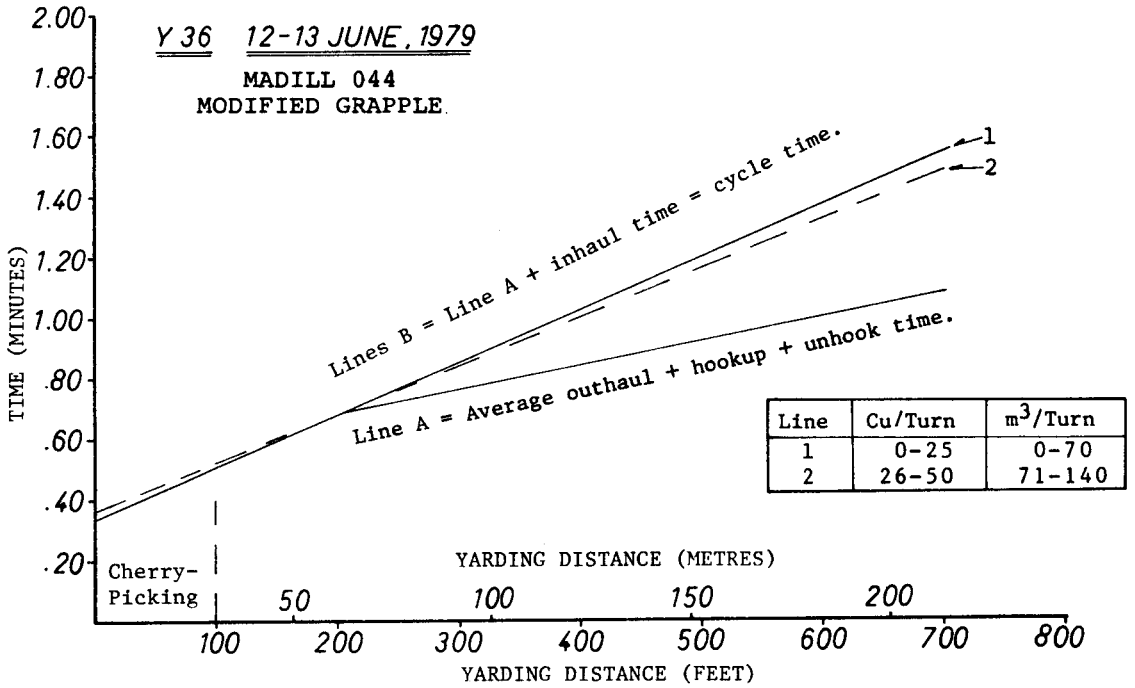

Line	Cu/Turn	m^3/Turn
1	0-25	0-70
2	26-50	71-140

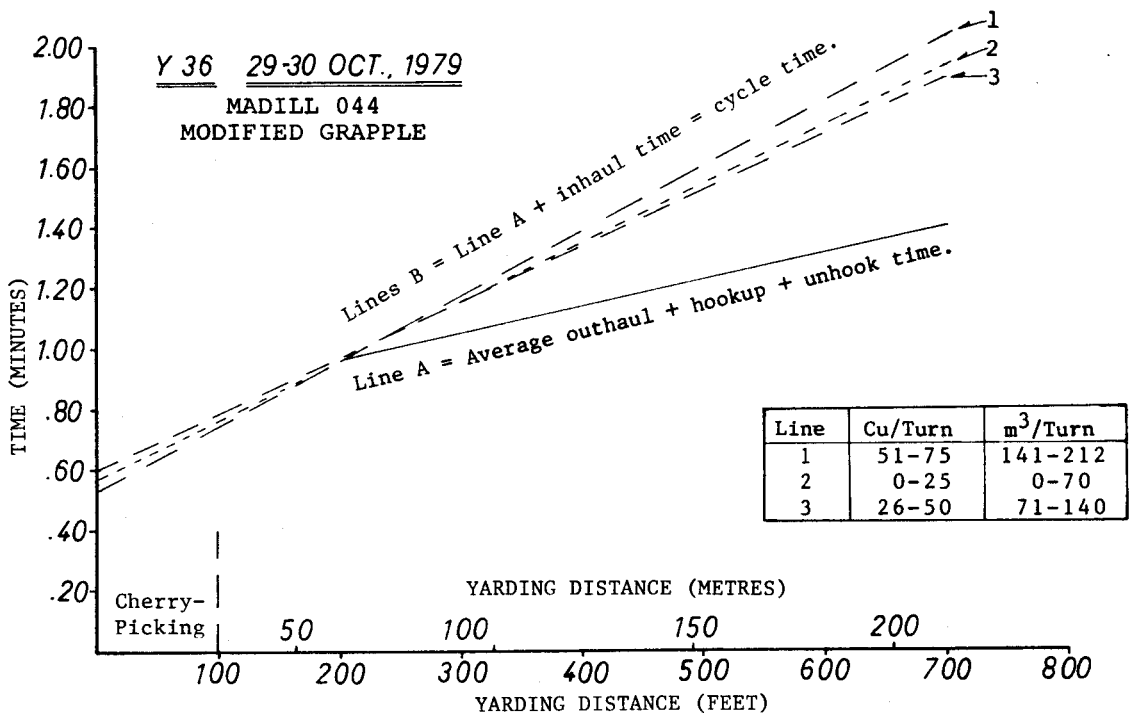

Line	Cu/Turn	m^3/Turn
1	51-75	141-212
2	0-25	0-70
3	26-50	71-140

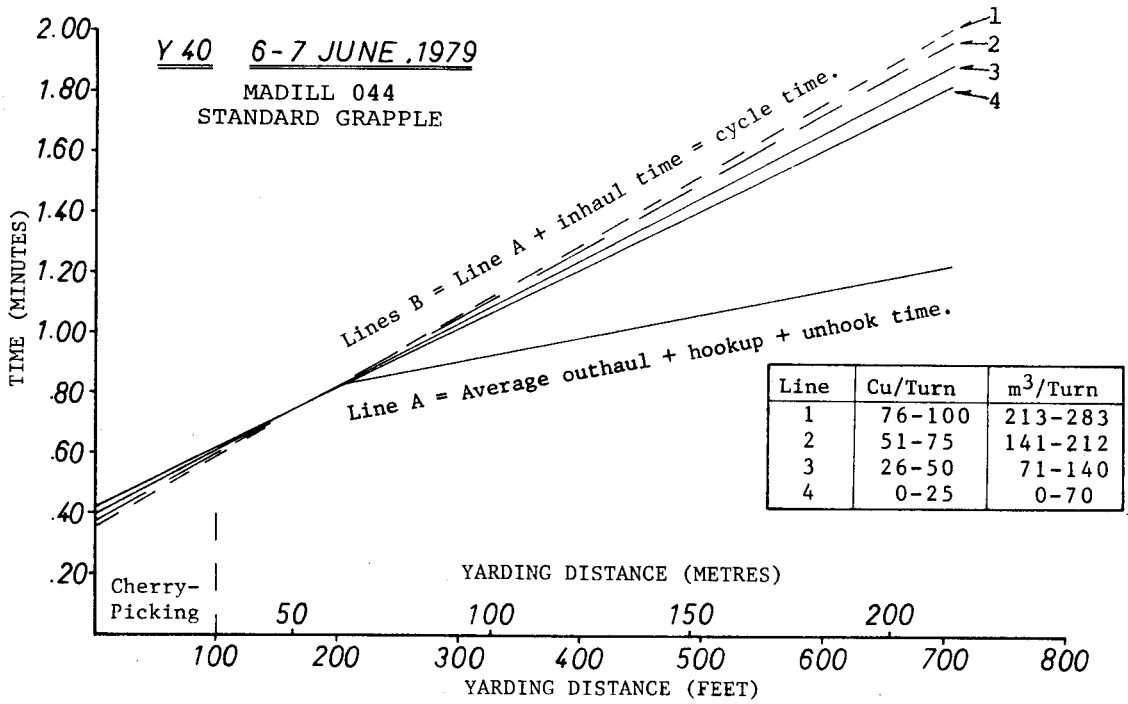

Line	Cu/Turn	m^3/Turn
1	76-100	213-283
2	51-75	141-212
3	26-50	71-140
4	0-25	0-70

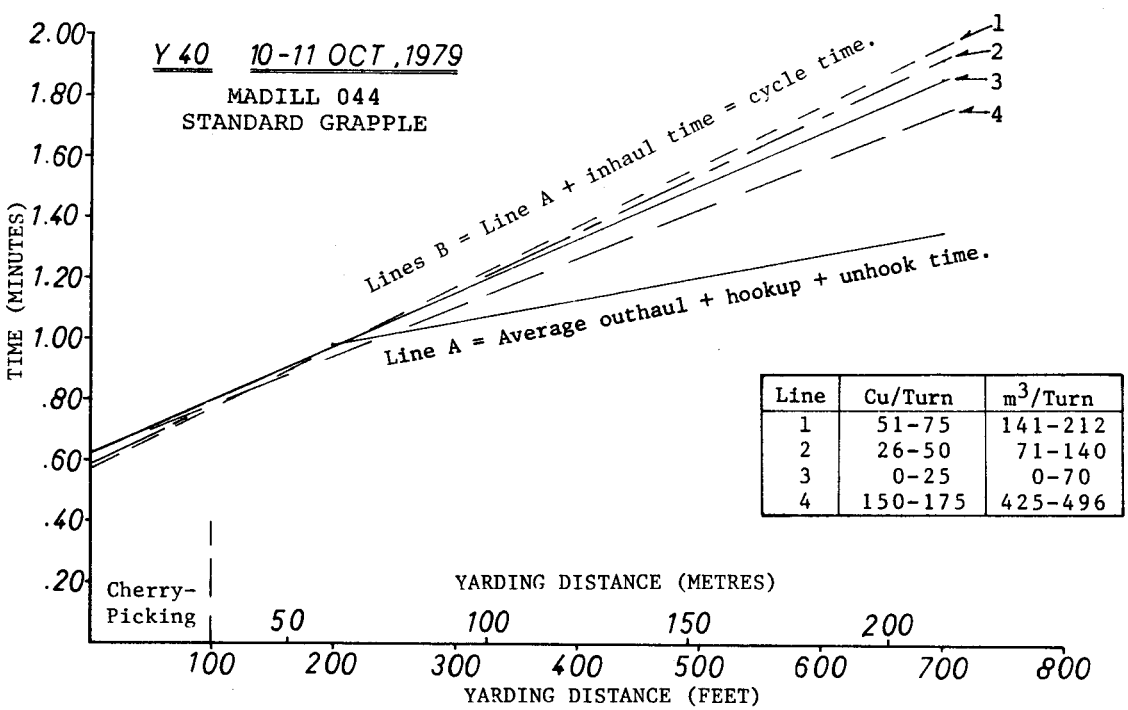

Line	Cu/Turn	m^3/Turn
1	51-75	141-212
2	26-50	71-140
3	0-25	0-70
4	150-175	425-496

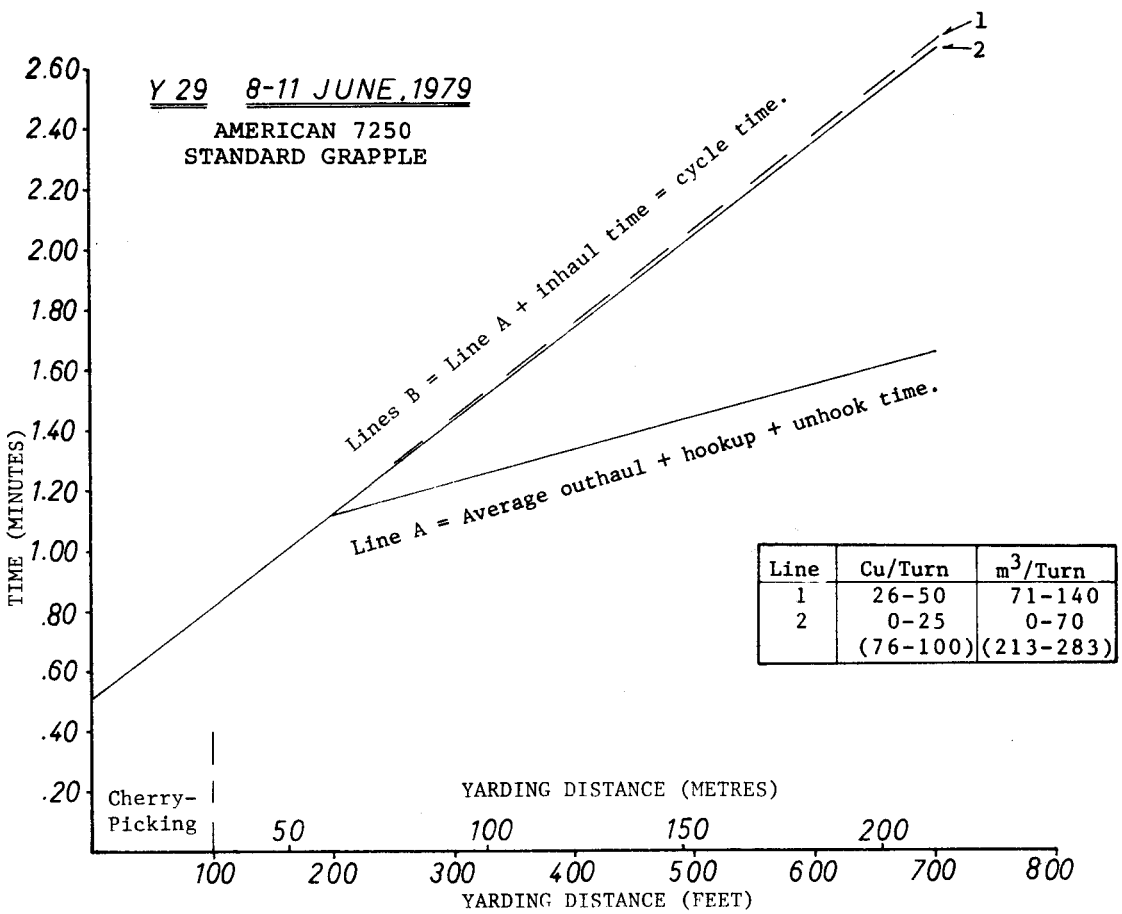

Line	Cu/Turn	m^3/Turn
1	26-50	71-140
2	0-25	0-70
	(76-100)	(213-283)

APPENDIX III
ERGONOMIC EVALUATION
MADILL 044

The ergonomic check proposed by Zerbe in FERIC Technical Note No. TN-30 (1979) was used to evaluate the two Madill 044 Yarding Cranes. The wheeled model (Y36) was built in 1975 and the tracked model (Y40) in 1978. There were few differences between the machines, however, except for the undercarriage and its controls. This summary of the ergonomic check concentrates on areas where improvements in operator comfort and safety might be made.

	Category	Comments
1.	Climbing On and Off:	Tracked Model: The distance to the first step is high. An additional step could be incorporated in the undercarriage side-frame and hand-holds could be rearranged. Wheeled model: The tire and wheel are used for steps. These can become slippery when wet. Hand-holds should be rearranged.
2.	Operator's Cab:	Space is ample. Controls at sides hinder fast seat entry and exit. There was no fire extinguisher in the cab. It was placed near the engine. An actuating device in the cab for the engine fire extinguisher is suggested as well as a second fire extinguisher in the cab. (Note: fire extinguishers are usually placed on the unit by the owner.) Complete automatic fire extinguisher systems are available if requested.

Note: Grapple-yarding cranes are manufactured as basic models. Purchasers often specify special modifications, and this ergonomic evaluation may not apply to other Madill cranes.

	Category	Comments
3.	Operator's Seat:	The standard seat was adequate, but additional adjustment is desirable for greater comfort.
4.	Location of Controls and Control-Actuating Forces:	Frequently-used controls were located within the guidelines of the checklist (except for the foot pedals located closer to the seat than recommended in the checklist) and appeared satisfactory for continuous machine operation. Controls appeared in logical groupings and accidental actuation is unlikely. It may be possible to combine some single function controls into multi-function joystick-type controls.
5.	Instruments and Warning Signals:	Satisfactory.
6.	Visibility	For yarding: Forward visibility is restricted to a 35° sweep. The machine is always swung to the yarding direction, however. Right-side horizontal visibility is good. Left side is obstructed by gantries although the operating drums are visible. Vertical visibility to front sweeps 90° to a maximum of 32° above eye level. When yarding on steep uphill slopes, the operator must lean forward to see. For moving: The machine can be swung to any direction to give good visibility.

	Category	Comments
7.	Lights:	Not evaluated. The machines were not used at night.
8.	Cab Climate:	Heater was satisfactory. Windows must be open during hot weather to allow ventilation. No air conditioner was installed.
9.	Air Quality:	No fumes were noticeable in the cab.
10.	Noise and Vibration:	Operators wore ear protection. Noise levels in the cab with windows open were close to the U.S. Department of Labor, Occupational Safety and Health Administration dB-A limits for short durations. More insulation in the cab would reduce noise levels to well below the established limits. Noise levels outside the yarder were satisfactory. Vibration occurred on log inhaul. No operator discomfort was noted.
11.	Machine Maintenance:	Normal maintenance functions were easily performed. Tool storage was satisfactory.

12. Changes Recommended:

a) Operator access and egress could be improved by installing additional footholds and handholds.

b) A fire extinguisher near the cab is suggested.

c) Seat adjustability and comfort could be improved.

APPENDIX IV

Conversion Factors Used

1 metre	=	3.280 84 feet
1 centimetre	=	0.621 371 inch
1 kilogram	=	2.204 634 pound
1 kilowatt	=	1.340 482 horsepower
1 pascal	=	.000 145 037 pounds per square inch
1 cubic metre	=	0.353 147 cunit
1 metre per second	=	196.850 39 feet per minute